Inseego Wavemaker™ 5G Indoor Router FX3100

Quick Start Guide



This guide provides instructions for setting up, connecting, and configuring your FX3100.

Front view

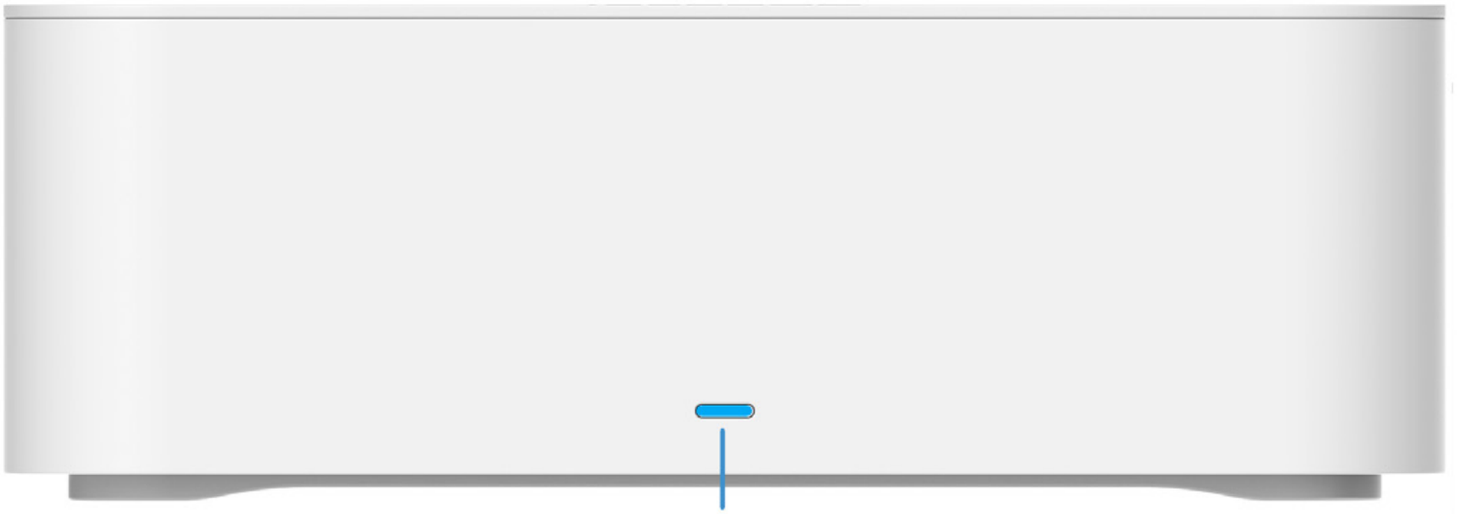

LED Color	Operation	Meaning
Blue	Solid Blinking	Strong 5G connection (3 – 5 bars) Weak 5G connection (1 – 2 bars)
Green	Solid Blinking	Strong 4G connection (3 – 5 bars) Weak 4G connection (1 – 2 bars)
Yellow	Solid	Software update is in progress
Red	Solid Blinking	Router is booting up No service, SIM error, or locked SIM card
White	Solid Blinking	Device on Ethernet WAN Factory reset

Back view

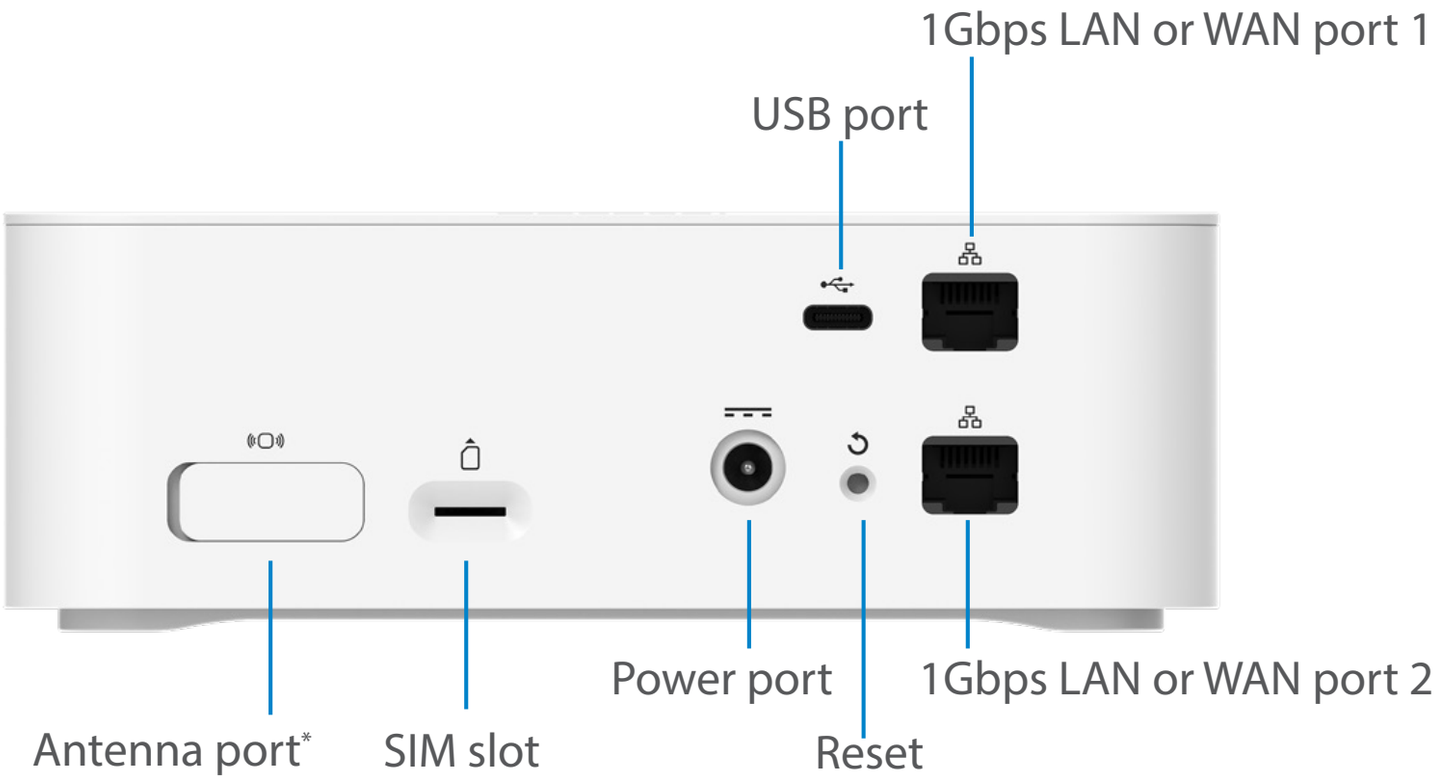

* The antenna port is for an optional external 3.4-5GHz antenna and will only provide support for mobile frequency bands within this range. To activate the external antenna port, you must enable it from **Settings > Preferences** in the Admin web UI.

Setting up your FX3100

Step **one:** install the SIM card

- Insert a Nano SIM card into the SIM slot on the back of the device.

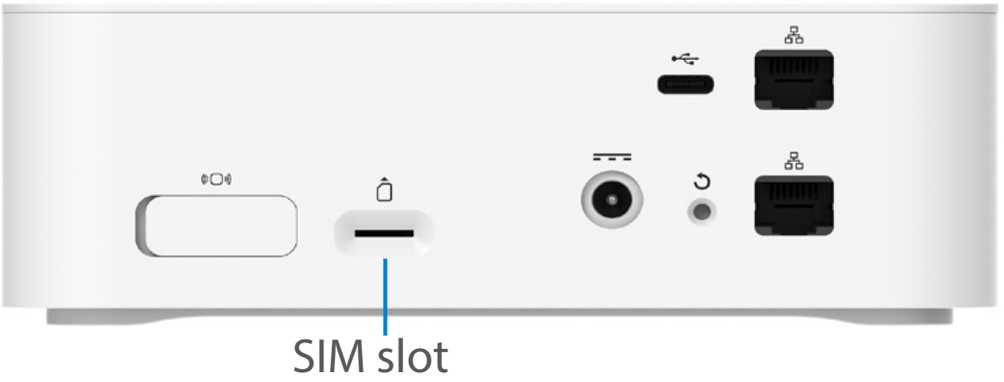

NOTE: If necessary, remove the SIM from its protective sleeve, being careful not to touch the gold-colored contact points. **Insert the SIM card notch first, with the contact points facing down**.

This device supports only Nano SIM cards.

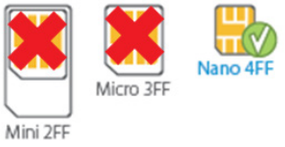

Step **two:** power on the FX3100

- Plug the power cord into the router power port and plug the power adapter into an AC wall outlet.

WARNING: Be sure to use the power adapter that came with your device to avoid damage that may void the warranty.

Step **three:** identify a location for your FX3100

- Scan the QR code to download the Inseego Mobile™ app from AppStore or Google Play , or visit **https://inseego.com/products/cloud-management/inseego-mobile-app/#available-now** to download the app.

- Follow instructions within the Inseego Mobile app to connect to the FX3100 and perform a location survey to identify the ideal location for your FX3100.

Connecting to a wireless device

To wirelessly connect a Wi-Fi-capable device (such as a PC, laptop, tablet, or phone) to your FX3100 for the first time:

1. Make sure the FX3100 is powered on and the indicator LED is blue or green.
2. On the device you want to connect to the internet, open the Wi-Fi settings or application and in the displayed list of available networks, find the **Primary Wi-Fi** network name printed on the bottom of your FX3100.

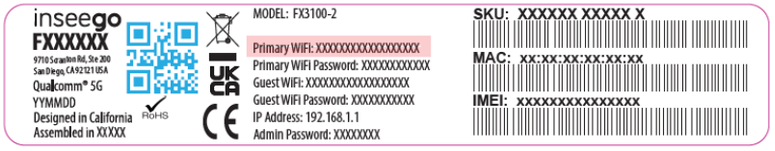

3. Click **Connect** or otherwise select the network name.
4. When prompted, enter the **Primary Wi-Fi Password** printed on the bottom of the router.

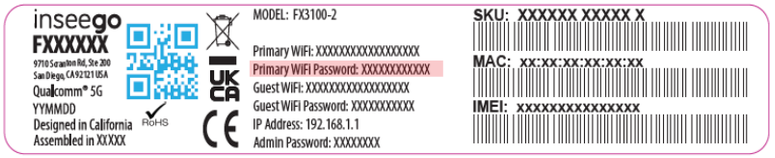

You can change the default name or password to something easier to remember (see "Monitoring and managing your FX3100").

Your Wi-Fi–capable device is now connected to the internet.

Monitoring and managing your FX3100

You can use the following options to monitor and manage your FX3100:

Inseego Mobile app - Use the same mobile app you used to install your FX3100 to perform basic device monitoring and management.

FX3100 Admin web UI - Access the web UI at **http://192.168.1.1** or **http://fx3100.com** for a full set of device management features.

NOTE: Passwords for WiFi and the Admin web UI are printed on the label of your device. We strongly recommend that you change your password before using your FX3100

Restoring factory settings

NOTE: When performing a factory reset, any changes made to settings will be lost.

To restore factory settings, follow these steps:

1. Verify that your FX3100 is powered on.
2. Locate the reset opening on the back of your router.
3. Press the recessed button for about five seconds until the device resets. The LED blinks white, then turns red. When it is green or blue, your FX3100 is ready.

NOTE: The first time you perform a factory reset, it may take over two minutes for your FX3100 to restart.

Inseego Mobile app requirements

Smartphone or device on iOS 13 or above, or Android 9.0 or above.

System requirements

Any device with Wi-Fi capability and an internet browser. The FX3100 is compatible with all major operating systems and the latest versions of browsers.

Support and more

Please reach out to your service provider.

More information

To access a user guide, go to **https://static.inseego.com/us/download/fx3100-userguide-global.pdf**.

Or, from the FX3100 Web UI, select **Help > Customer Support > User Guide**.

WARNING: DO NOT ATTEMPT TO SERVICE THE WIRELESS COMMUNICATION DEVICE YOURSELF. SUCH ACTION MAY VOID THE WARRANTY. THE ROUTER IS FACTORY TUNED. NO CUSTOMER CALIBRATION OR TUNING IS REQUIRED. CONTACT INSEEGO TECHNICAL SUPPORT FOR INFORMATION ABOUT SERVICING YOUR WIRELESS COMMUNICATION DEVICE.

inseego

© 2023 Inseego Corp. All Rights Reserved.

PN 14965413-004 Rev 2