Belden

IMAGE COMING SOON

Product: 0985 806 115

Fast Ethernet Cat 5e, high-flex, single-ended receptacle, M12 female straight, 4-pin, D-coding, 24 AWG TPE cable, stranded/unshielded, 2 twisted bonded pair with teal jacket.

Product Description

Fast Ethernet Cat 5e, high-flex, single-ended receptacle, M12 female straight, 4-pin, D-coding, 24 AWG TPE cable, stranded/unshielded, 2 twisted bonded pair with teal jacket.

Technical Drawing

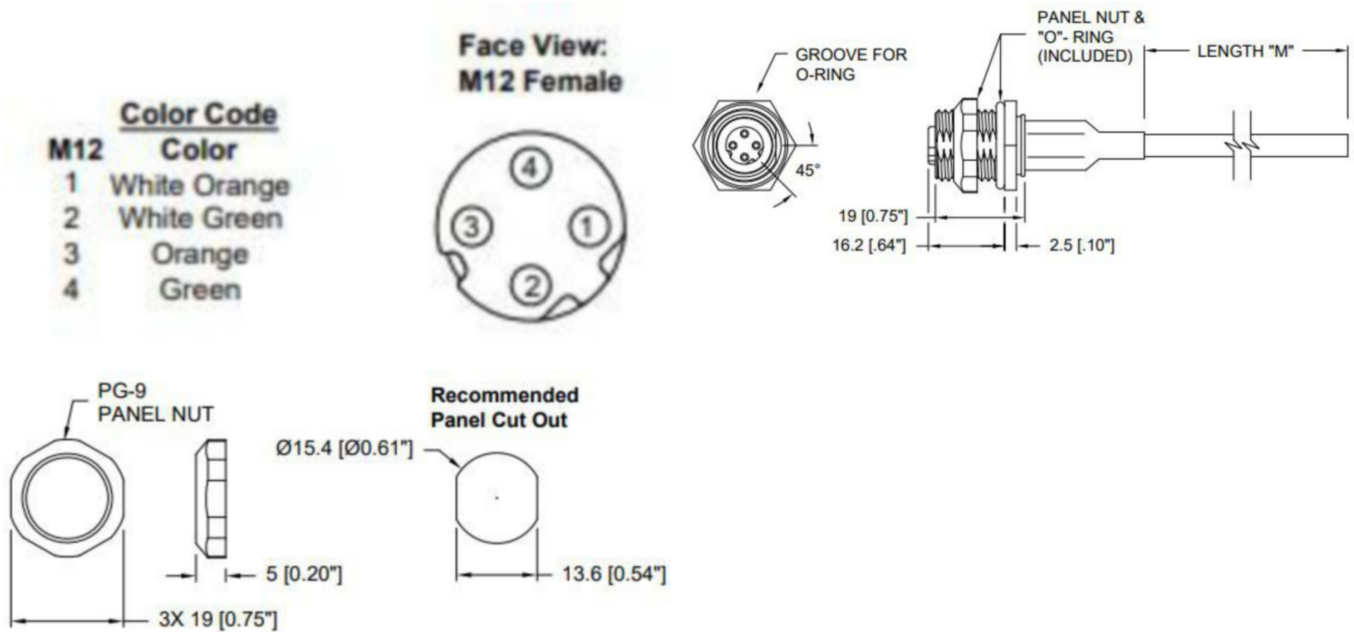

Technical Specifications

Technical Data

Product Family:	Data Connectors
Side 1 Product Sub Family:	M12 Standard
Brand:	Lumberg Automation
Connector Type:	Receptacle
Side 1 Type of Contact/Gender:	Female
Connector Design:	Straight
Number of Pins:	4
Coding, Side 1:	D
Shielding Type:	Unshielded
Attachment Type:	Coupling Screw
Voltage Rating:	60 V
Rated Impulse Voltage:	1.5 kV
Operating Voltage:	50 V AC / 60 V DC
Current Rating:	4 A
Data Transmission Type:	Fast Ethernet Cat5e

Data Transmission Rate:	100 Mbit/s
Side 1 Contact Resistance:	≤ 10 mOhm
Insulation Resistance:	> 10^9 Ohm
Mating Cycles:	≤ 100
Ambient Temperature (Operation)*:	- 40 °C - + 75 °C
Protection Degree / IP Rating**:	IP67
Side 1 Design Standard:	IEC 61076-2-101
Side 1 Pollution Degree:	3 acc. to DIN EN 60664-1 (VDE 0110-1)
Overvoltage Category:	III acc. to DIN EN 60664-1 (VDE 0110-1)

Materials

Contact Base Material:	CuZn
Side 1 Contact Plating:	Au over Ni
Contact Bearer Material:	Thermoplastic Polyurethane (TPU)
Contact Bearer Color:	Black
Flammability Class (Contact Bearer):	UL 94 HB
Molded Body Material:	TPU
Molded Body Color:	Black
Flammability Class (Molded Body):	UL 94 HB
Attachment Material:	Brass (Cu/Zn)
Attachment Plating:	Nickel (Ni)
O-Ring Material:	FKM

Additional Technical Data

Fastening Torque (Attachment):	M 12x1: (50-60) Ncm, hand-tight

Cable Data

Cable Number:	806
Conductor Size:	24 AWG
Number of Wires:	4 (2 twisted pairs)
Minimal Bending Radius (Fixed Inst):	.250"
Cycles (Bending):	> 2 M
Conductor Material:	Cu
Cable Jacket Material:	Thermoplastic Elastomer (TPE)
Cable Jacket Color:	Teal
Cable Diameter D:	Ø .275"
Wire Insulation Material:	PO
Insulated Wire Diameter:	.037"
Ambient Temperature (Fixed Installation):	75°C
UL Cable Type:	Cat 5e
Flammability Class (Cable Jacket):	UL: CMR / CSA: CMG
Core Colors:	White / Orange, White / Green, Orange, Green

Safety & Environmental Compliance

RoHS Compliant:	yes

Notes

Note Derating:	Notice derating
Protection Degree / IP Rating Note:	IP Rating tested according to IEC standard using combination of a Hirschmann or Lumberg Automation connector mounted and locked

© 2026 Belden, Inc

All Rights Reserved.

Although Belden makes every reasonable effort to ensure their accuracy at the time of this publication, information and specifications described here in are subject to error or omission and to change without notice, and the listing of such information and specifications does not ensure product availability.

Belden provides the information and specifications herein on an "ASIS" basis, with no representations or warranties, whether express, statutory or implied. In no event will Belden be liable for any damages (including consequential, indirect, incidental, special, punitive, or exemplary damages) whatsoever, even if Belden has been advised of the possibility of such damages, whether in an action under contract, negligence or any other theory, arising out of or in connection with the use, or inability to use, the information or specifications described herein.

All sales of Belden products are subject to Belden's standard terms and conditions of sale.

Belden believes this product to be in compliance with all applicable environmental programs as listed in the data sheet. The information provided is correct to the best of Belden's knowledge, information and belief at the date of its publication. This information is designed only as a general guide for the safe handling, storage, and any other operation of the product itself or the one that it becomes a part of. The Product Disclosure is not to be considered a warranty or quality specification. Regulatory information is for guidance purposes only. Product users are responsible for determining the applicability of legislation and regulations based on their individual usage of the product.