HIRSCHMANN
A BELDEN BRAND

Product: GDMW 3011 CF black

GDMW High-Voltage Line DIN Standard Field Attachable Connector: Form A, 4-pin (3+1PE; PE across cable outlet), black housing, screw type, PG11; without circuitry, 400 V AC/DC, 16 A

Product Description

GDMW High-Voltage Line DIN Standard Field Attachable Connector: Form A, 4-pin (3+1PE; PE across cable outlet), black housing, screw type, PG11; without circuitry, 400 V AC/DC, 16 A

Technical Drawing

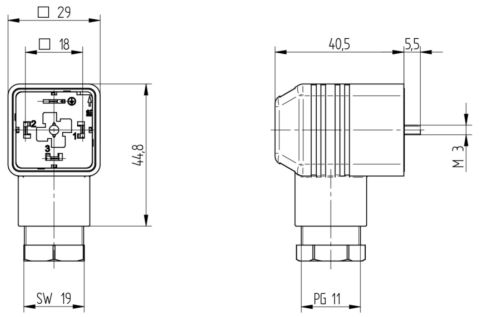

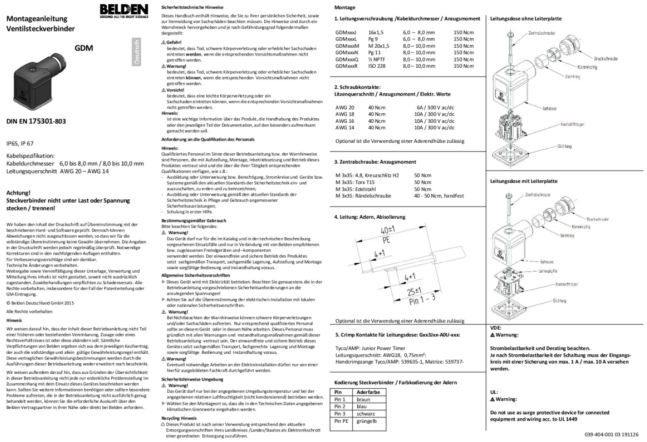

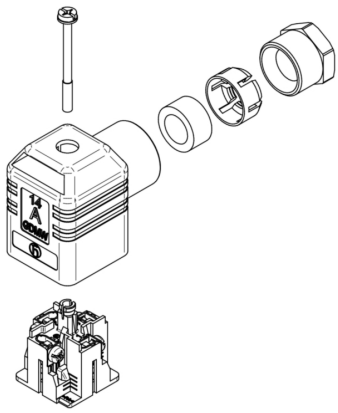

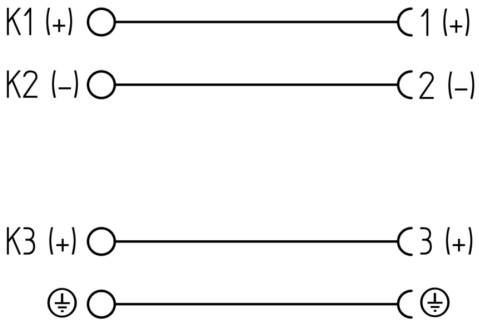

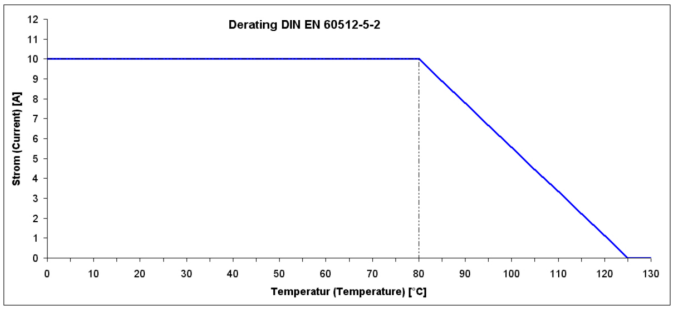

Technical Specifications

Technical Data

Product Family:	Valve Connectors
Side 1 Product Sub Family:	GDMW High-Voltage Line
Brand:	Hirschmann
Connector Type:	Field attachable
Side 1 Type of Contact/Gender:	Female
Connector Design:	Angled
Number of Pins:	3+PE (PE across cable outlet)
Coding, Side 1:	A
Shielding Type:	Unshielded
Attachment Type:	Central Screw
Rated Impulse Voltage:	4.0 kV
Operating Voltage:	400 V AC/DC
Current Rating:	16 A
Side 1 Contact Resistance:	≤ 10 mOhm
Insulation Resistance:	> 10^9 Ohm
Mating Cycles:	≤ 50
Type of Connection:	Screw
Cable Gland:	PG11
Cross Section:	0.25 - 1.5 mm²
Suitable Cables:	Ø 4.5 - 11 mm
Ambient Temperature (Operation)*:	-40 °C - +125 °C
Protection Degree / IP Rating**:	IP65
Side 1 Design Standard:	DIN EN 175301-803-A, ISO 4400
Side 1 Pollution Degree:	3 acc. to DIN EN 60664-1 (VDE 0110-1)
Clearance / Creepage Distance:	DIN EN 60664-1 (2008/01); VDE 0110-1
Overvoltage Category:	III acc. to DIN EN 60664-1 (VDE 0110-1)

Materials

Contact Base Material:	CuZn
Side 1 Contact Plating:	Cu/Sn
Contact Bearer Material:	PA GF
Contact Bearer Color:	black
Flammability Class (Contact Bearer):	UL 94 HB
Housing Material:	PA GF
Housing Color:	Black
Flammability Class (Housing):	UL 94 HB
Cable Gland Material:	PA GF
Cable Gland Gasket:	NBR
Cable Gland Color:	Black
Attachment Material:	Steel, Philips combi slot
Gasket Material:	Sold separately

Additional Technical Data

Fastening Torque (Contact Screw):	(50-60) Ncm

Fastening Torque (Cable Gland):	(150-200) Ncm
Fastening Torque (Attachment):	(50-60) Ncm

Approvals

VDE:	yes
SEV:	yes

Safety & Environmental Compliance

RoHS Compliant:	yes

Notes

Note Derating:	Notice derating
Protection Degree / IP Rating Note:	** only if mounted and locked in combination with Hirschmann / Lumberg Automation connector.
Note:	Do not connect or disconnect under load.

Variants

Item #	Item Description
932545200	GDMW 3011 CF black

© 2026 Belden, Inc

All Rights Reserved.

Although Belden makes every reasonable effort to ensure their accuracy at the time of this publication, information and specifications described here in are subject to error or omission and to change without notice, and the listing of such information and specifications does not ensure product availability.

Belden provides the information and specifications herein on an "ASIS" basis, with no representations or warranties, whether express, statutory or implied. In no event will Belden be liable for any damages (including consequential, indirect, incidental, special, punitive, or exemplary damages) whatsoever, even if Belden has been advised of the possibility of such damages, whether in an action under contract, negligence or any other theory, arising out of or in connection with the use, or inability to use, the information or specifications described herein.

All sales of Belden products are subject to Belden's standard terms and conditions of sale.

Belden believes this product to be in compliance with all applicable environmental programs as listed in the data sheet. The information provided is correct to the best of Belden's knowledge, information and belief at the date of its publication. This information is designed only as a general guide for the safe handling, storage, and any other operation of the product itself or the one that it becomes a part of. The Product Disclosure is not to be considered a warranty or quality specification. Regulatory information is for guidance purposes only. Product users are responsible for determining the applicability of legislation and regulations based on their individual usage of the product.