lumbergautomation
A BELDEN BRAND

Product: RKCP 3

1 3/8" Power Field attachable connector, female, straight, 3-pin, screw termination, black plastic housing

Product Description

1 3/8" Power Field attachable connector, female, straight, 3-pin, screw termination, black plastic housing

Technical Drawing

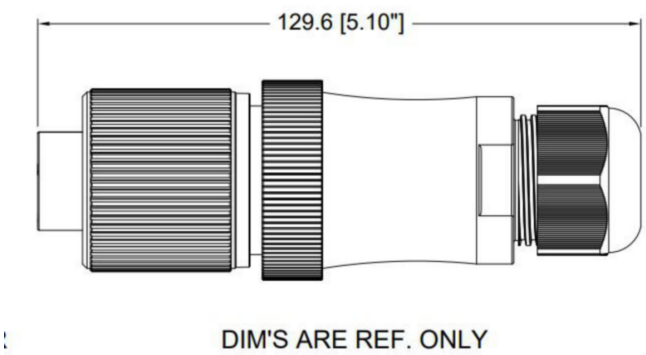

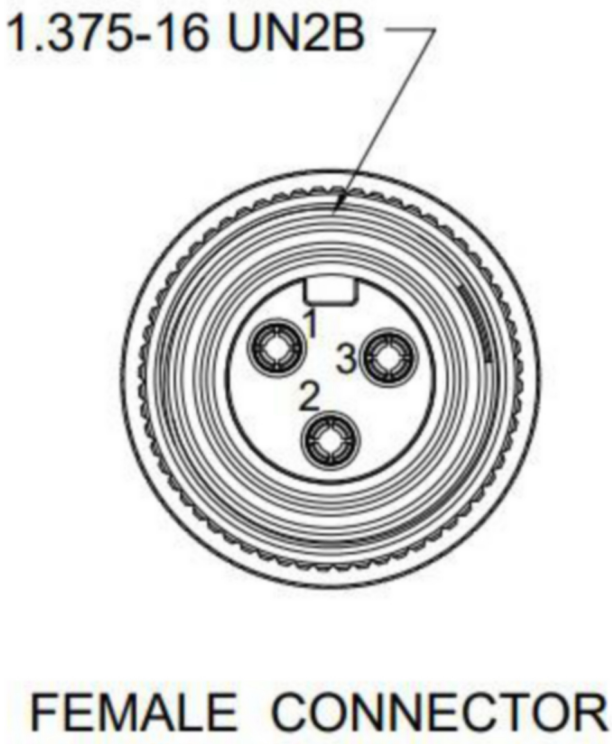

Technical Specifications

Technical Data

Product Family:	Power Connector
Brand:	Lumberg Automation
Connector Type:	Field Attachable
Side 1 Type of Contact/Gender:	female
Connector Design:	straight
Number of Pins:	3
Shielding Type:	Unshielded
Attachment Type:	Coupling Nut
Rated Voltage (UL):	600 V
Rated Current (UL)*:	45 A
Cable Gland:	PG 11

Ambient Temperature (Operation)*:	-40 °C to +105 °C
Protection Degree / IP Rating**:	IP 67

Materials

Contact Base Material:	Copper Alloy
Side 1 Contact Plating:	Gold
Contact Bearer Material:	PBT
Contact Bearer Color:	Black
Molded Body Material:	Polyamide
Molded Body Color:	black
Attachment Material:	Brass

Approvals

UL-File:	E482233

Safety & Environmental Compliance

RoHS Compliant:	Yes

Notes

Protection Degree / IP Rating Note:	** only if mounted and locked in combination with Hirschmann / Lumberg Automation connector.

Variants

Item #	Item Description
511000982	RKCP 3

© 2026 Belden, Inc

All Rights Reserved.

Although Belden makes every reasonable effort to ensure their accuracy at the time of this publication, information and specifications described here in are subject to error or omission and to change without notice, and the listing of such information and specifications does not ensure product availability.

Belden provides the information and specifications herein on an "ASIS" basis, with no representations or warranties, whether express, statutory or implied. In no event will Belden be liable for any damages (including consequential, indirect, incidental, special, punitive, or exemplary damages) whatsoever, even if Belden has been advised of the possibility of such damages, whether in an action under contract, negligence or any other theory, arising out of or in connection with the use, or inability to use, the information or specifications described herein.

All sales of Belden products are subject to Belden's standard terms and conditions of sale.

Belden believes this product to be in compliance with all applicable environmental programs as listed in the data sheet. The information provided is correct to the best of Belden's knowledge, information and belief at the date of its publication. This information is designed only as a general guide for the safe handling, storage, and any other operation of the product itself or the one that it becomes a part of. The Product Disclosure is not to be considered a warranty or quality specification. Regulatory information is for guidance purposes only. Product users are responsible for determining the applicability of legislation and regulations based on their individual usage of the product.