HIRSCHMANN
A BELDEN BRAND

Product: GDM2106-C3S-10D

Life Cycle Status: Discontinued

Form A, 18mm - Female 90° | #Contacts: 2+Ground (PE), Screw Type | Bridge-Type Rectifier w/ Varistor (MOV) & Capacitor | 120 V | Black Housing, Black M16 Cable Gland | Included: Central Screw | Bulk Packaging

Product Description

Form A, 18mm - Female Angled | #Contacts: 2+Ground (PE), Screw Type | Bridge-Type Rectifier w/ Varistor (MOV) & Capacitor | 120 V / 1A / 1A | Black Housing, Black M16 Cable Gland | Included: Central Screw | Bulk Packaging

Technical Drawing

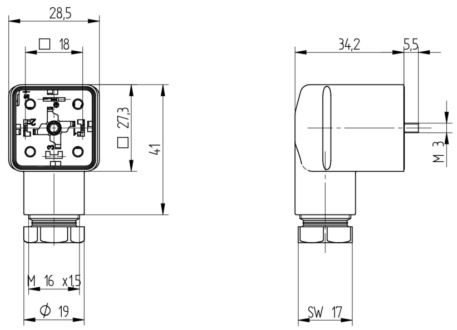

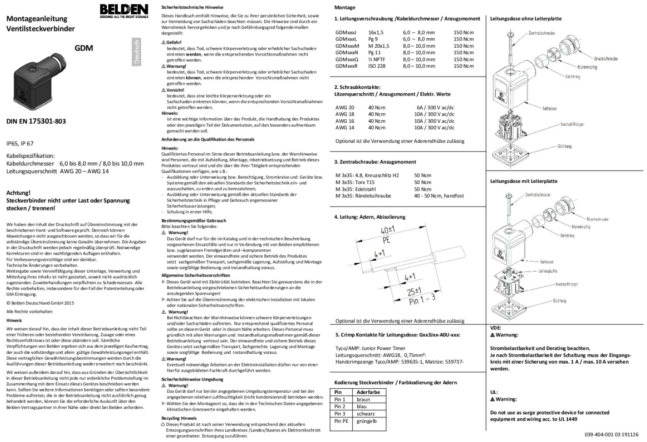

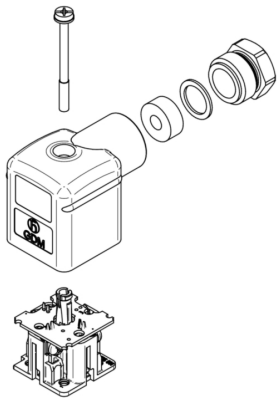

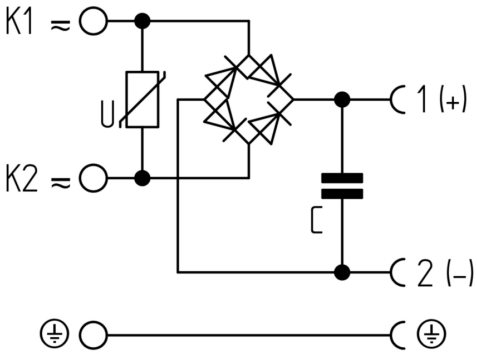

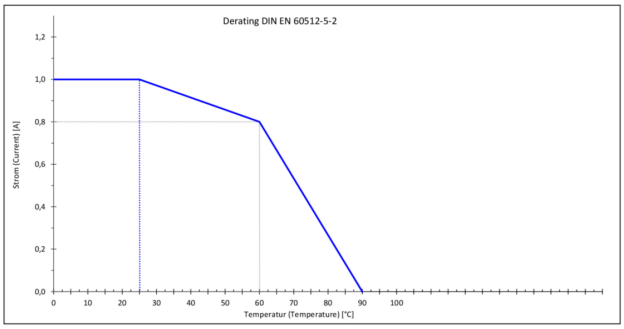

Technical Specifications

Product Life Cycle

Availability:	Active

Technical Data

Product Family:	Valve Connectors
Side 1 Product Sub Family:	GDM Standard
Brand:	Hirschmann
Connector Type:	Field attachable
Connector Sub Type:	Form A
Side 1 Type of Contact/Gender:	Socket Contacts / Female
Connector Design:	Angled (90°) Body
Number of Pins:	2+PE (PE across cable outlet)
Coding, Side 1:	A
Shielding Type:	Unshielded
Attachment Type:	Central Screw, M 3 x 35
Voltage Rating:	120 V
Rated Impulse Voltage:	4.0 kV (PCBA 2.0 kV)
Operating Voltage:	110 V AC/DC
Current Rating:	1 A
Side 1 Contact Resistance:	≤ 10 mOhm
Insulation Resistance:	> 10^9 Ohm
Mating Cycles:	≤ 50
Type of Connection:	Screw terminal
Cable Gland:	M16
Cross Section:	0.25 - 1.5 mm²
Suitable Cables:	Ø 4.5 - 9 mm
Ambient Temperature (Operation)*:	- 40 °C to + 125 °C [Connector] - 30 °C to + 90 °C [when mated with NBR gasket] - 15 °C to + 125 °C [when mated with FKM gasket] - 40 °C to + 125 °C [when mated with EPDM or MPQ gasket]
Protection Degree / IP Rating**:	IP65
Side 1 Design Standard:	DIN EN 175301-803-A, ISO 4400
Side 1 Pollution Degree:	3 acc. to DIN EN 60664-1 (VDE 0110-1)
Clearance / Creepage Distance:	DIN EN 60664-1 (2008/01); VDE 0110-1
Overvoltage Category:	III acc. to DIN EN 60664-1 (VDE 0110-1)

Materials

Contact Base Material:	Brass (CuZn)
Side 1 Contact Plating:	Copper-Tin Alloy (Cu/Sn)
Contact Bearer Material:	Glass-Fiber Reinforced Polyamide (PA GF)
Contact Bearer Color:	Black
Flammability Class (Contact Bearer):	UL 94 HB

Housing Material:	Glass-Fiber Reinforced Polyamide (PA GF)
Housing Color:	Black
Flammability Class (Housing):	UL 94 HB
Cable Gland Material:	Glass-Fiber Reinforced Polyamide (PA GF)
Cable Gland Gasket:	Nitrile Butadiene Rubber (NBR)
Cable Gland Color:	Black
Flammability Class (Cable Gland):	UL 94 HB
Attachment Material:	Steel Fastener (4.8 , Fe/Zn B)
Gasket Material:	Sold separately

Protection Circuitry

Bridge Rectifier:	Bridge-Type Rectifier
Protective Circuit:	Varistor (MOV) & Capacitor

Additional Technical Data

Fastening Torque (Contact Screw):	(40-50) Ncm for conductor size 0.5 - 1.5 mm²; (30-40) Ncm for conductor size 0.38-0.34 mm²; (25-30) Ncm for conductor size 0.25 mm²
Fastening Torque (Cable Gland):	(150-200) Ncm
Fastening Torque (Attachment):	(50-60) Ncm

Approvals

VDE:	VDE-Reg.-Nr.: E349
SEV:	Yes

Safety & Environmental Compliance

REACH:	Yes
RoHS Compliant:	Compliant

Notes

Note Derating:	Notice derating
Protection Degree / IP Rating Note:	IP Rating tested according to IEC standard using combination of a Hirschmann or Lumberg Automation connector mounted and locked
Note:	Do not connect or disconnect under load.

© 2026 Belden, Inc

All Rights Reserved.

Although Belden makes every reasonable effort to ensure their accuracy at the time of this publication, information and specifications described here in are subject to error or omission and to change without notice, and the listing of such information and specifications does not ensure product availability.

Belden provides the information and specifications herein on an "ASIS" basis, with no representations or warranties, whether express, statutory or implied. In no event will Belden be liable for any damages (including consequential, indirect, incidental, special, punitive, or exemplary damages) whatsoever, even if Belden has been advised of the possibility of such damages, whether in an action under contract, negligence or any other theory, arising out of or in connection with the use, or inability to use, the information or specifications described herein.

All sales of Belden products are subject to Belden's standard terms and conditions of sale.

Belden believes this product to be in compliance with all applicable environmental programs as listed in the data sheet. The information provided is correct to the best of Belden's knowledge, information and belief at the date of its publication. This information is designed only as a general guide for the safe handling, storage, and any other operation of the product itself or the one that it becomes a part of. The Product Disclosure is not to be considered a warranty or quality specification. Regulatory information is for guidance purposes only. Product users are responsible for determining the applicability of legislation and regulations based on their individual usage of the product.