lumbergautomation
A BELDEN BRAND

Product: RKF 30-638/3M P-13491

7/8" Power Receptacle: Female, straight, 3-pin, front mount with pigtail wires

Product Description

7/8" Power Receptacle: Female, straight, 3-pin, front mount with pigtail wires

Technical Drawing

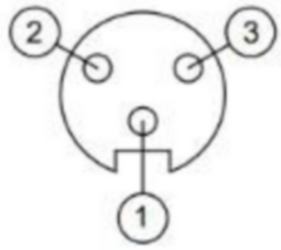

FACE VIEW
FEMALE

COLOR CODE

1 = GREEN/YELLOW
2 = ORANGE
3 = WHITE/ORANGE

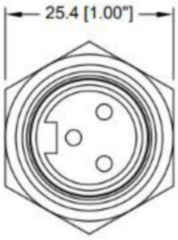

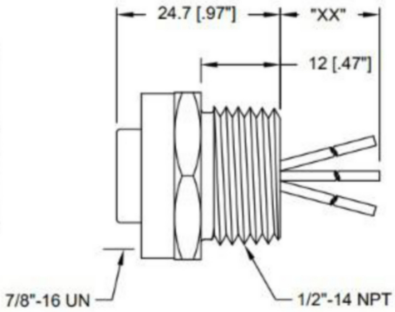

PANEL O-RING AND LOCKNUT INCLUDED

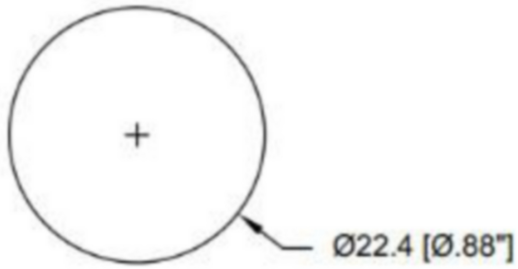

REF. KNOCKOUT HOLE

Technical Specifications

Technical Data

Product Family:	Power Connector
Side 1 Product Sub Family:	7/8"
Brand:	Lumberg Automation
Connector Type:	Receptacle
Side 1 Type of Contact/Gender:	Female
Connector Design:	Front Mount, 1/2-14 NPT panel tap size
Number of Pins:	3
Coding, Side 1:	A
Attachment Type:	Fixed, External Thread

Voltage Rating:	250 V
Rated Voltage (UL):	600 V
Rated Current (UL)*:	10 A
Ambient Temperature (Operation)*:	-40 °C to +90 °C
Protection Degree / IP Rating**:	IP65, IP67

Materials

Contact Base Material:	CuZn
Side 1 Contact Plating:	Au over Ag
Contact Bearer Material:	TPU
Contact Bearer Color:	YE
Housing Material:	Zn die cast with black E-Coating
O-Ring Material:	FKM, panel side
Attachment Type, Side 2:	1/2-14 NPT, Steel, Lock Nut

Cable Data

Conductor Size:	16 AWG
Number of Wires:	3
Conductor Material:	Cu
Wire Insulation Material:	PVC
Insulated Wire Diameter:	Ø 3.07 mm
UL Cable Type:	1015/1230

Approvals

UL-File:	E315587
UL:	UL recognized

Safety & Environmental Compliance

RoHS Compliant:	Yes

Notes

Note Derating:	Notice Derating
Protection Degree / IP Rating Note:	Protection Degree and IP Rating per test standard IEC 60529 using a Lumberg Automation mating product

© 2026 Belden, Inc

All Rights Reserved.

Although Belden makes every reasonable effort to ensure their accuracy at the time of this publication, information and specifications described here in are subject to error or omission and to change without notice, and the listing of such information and specifications does not ensure product availability.

Belden provides the information and specifications herein on an "ASIS" basis, with no representations or warranties, whether express, statutory or implied. In no event will Belden be liable for any damages (including consequential, indirect, incidental, special, punitive, or exemplary damages) whatsoever, even if Belden has been advised of the possibility of such damages, whether in an action under contract, negligence or any other theory, arising out of or in connection with the use, or inability to use, the information or specifications described herein.

All sales of Belden products are subject to Belden's standard terms and conditions of sale.

Belden believes this product to be in compliance with all applicable environmental programs as listed in the data sheet. The information provided is correct to the best of Belden's knowledge, information and belief at the date of its publication. This information is designed only as a general guide for the safe handling, storage, and any other operation of the product itself or the one that it becomes a part of. The Product Disclosure is not to be considered a warranty or quality specification. Regulatory information is for guidance purposes only. Product users are responsible for determining the applicability of legislation and regulations based on their individual usage of the product.