lumbergautomation
A BELDEN BRAND

Product: RSF 30 TB

7/8" Power Receptacle: Male to Terminal Block, 3-pin, PG21

Product Description

7/8" Power Receptacle: Male, straight, 3-pin, front mount, PG21 Panel Hole to Terminal Black 6 Pin, 300 V, 8 A

Technical Drawing

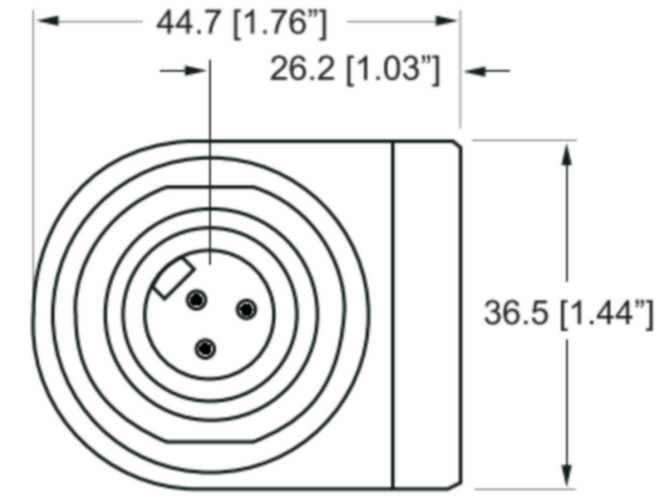

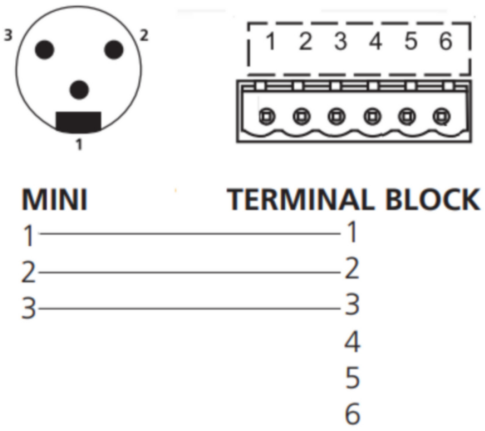

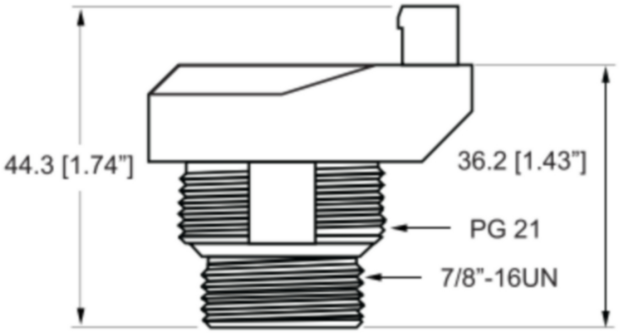

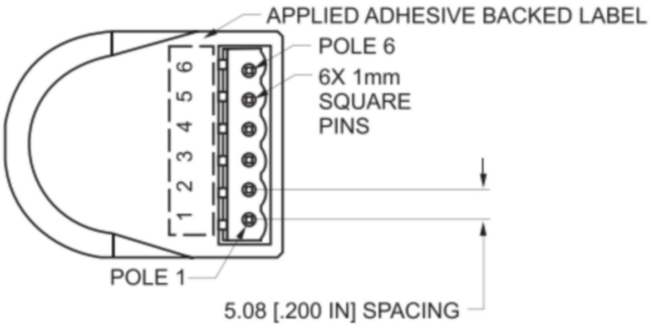

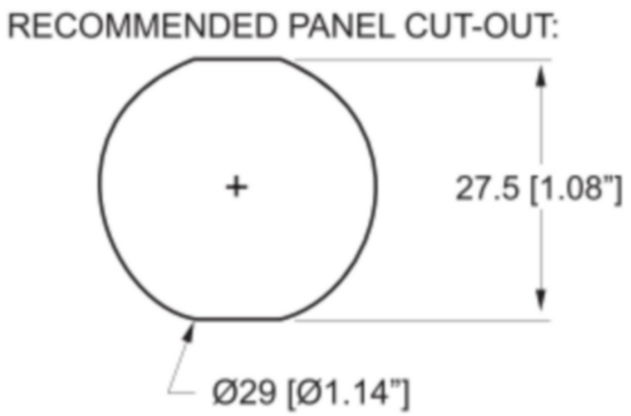

Technical Specifications

Technical Data

Product Family:	Power Connector
Side 1 Product Sub Family:	7/8"
Brand:	Lumberg Automation
Connector Type:	Receptacle
Side 1 Type of Contact/Gender:	Male
Connector Design:	Front Mount, PG21 panel tap size
Number of Pins:	3
Coding, Side 1:	A
Shielding Type:	Unshielded
Attachment Type:	Fixed, External Thread
Voltage Rating:	300 V
Rated Voltage (UL):	300 V
Current Rating:	8 A
Rated Current (UL)*:	8 A
Ambient Temperature (Operation)*:	-25 °C to +90 °C

Materials

Side 1 Contact Plating:	Au over Ag
Contact Bearer Material:	TPU
Contact Bearer Color:	YE
Housing Material:	Al, clear anodized
O-Ring Material:	TPU, WH
Attachment Type, Side 2:	PG21, Zn, Zn Plated, Lock Nut

Safety & Environmental Compliance

RoHS Compliant:	Yes

Notes

Note Derating:	Notice Derating
Protection Degree / IP Rating Note:	Protection Degree and IP Rating per test standard IEC 60529 using a Lumberg Automation mating product
Note:	Recommended Mating Terminal Block: MC 100-508-06 180° wire exit; Do not connect / disconnect under load

Variants

Item #	Item Description
500002266	RSF 30 TB

© 2026 Belden, Inc

All Rights Reserved.

Although Belden makes every reasonable effort to ensure their accuracy at the time of this publication, information and specifications described here in are subject to error or omission and to change without notice, and the listing of such information and specifications does not ensure product availability.

Belden provides the information and specifications herein on an "ASIS" basis, with no representations or warranties, whether express, statutory or implied. In no event will Belden be liable for any damages (including consequential, indirect, incidental, special, punitive, or exemplary damages) whatsoever, even if Belden has been advised of the possibility of such damages, whether in an action under contract, negligence or any other theory, arising out of or in connection with the use, or inability to use, the information or specifications described herein.

All sales of Belden products are subject to Belden's standard terms and conditions of sale.

Belden believes this product to be in compliance with all applicable environmental programs as listed in the data sheet. The information provided is correct to the best of Belden's knowledge, information and belief at the date of its publication. This information is designed only as a general guide for the safe handling, storage, and any other operation of the product itself or the one that it becomes a part of. The Product Disclosure is not to be considered a warranty or quality specification. Regulatory information is for guidance purposes only. Product users are responsible for determining the applicability of legislation and regulations based on their individual usage of the product.