HIRSCHMANN
A BELDEN BRAND

## Product: GDM21FA-D28-10D

Form A, 18mm - Female 90° | #Contacts: 2+Ground (PE), Screw Type | Recovery Diode (FRD) & ye LED | 48 V | Translucent Housing, Black M20 Cable Gland | Included: Central Screw | Bulk Packaging

### Product Description

Form A, 18mm - Female Angled | #Contacts: 2+Ground (PE), Screw Type | Recovery Diode (FRD) & yellow LED | 48 V / 10A | Translucent Housing, Black M20 Cable Gland | Included: Central Screw | Bulk Packaging

### Technical Drawing

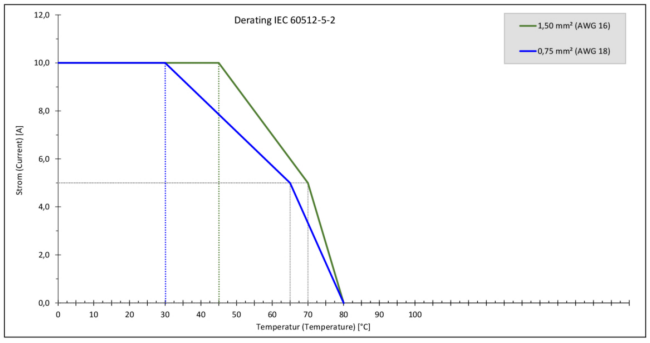


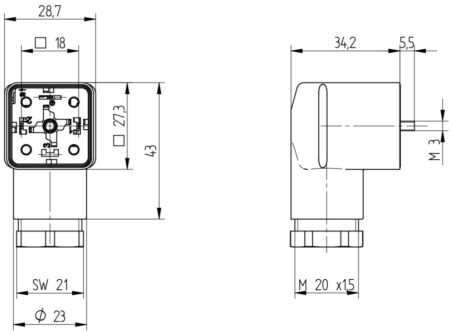


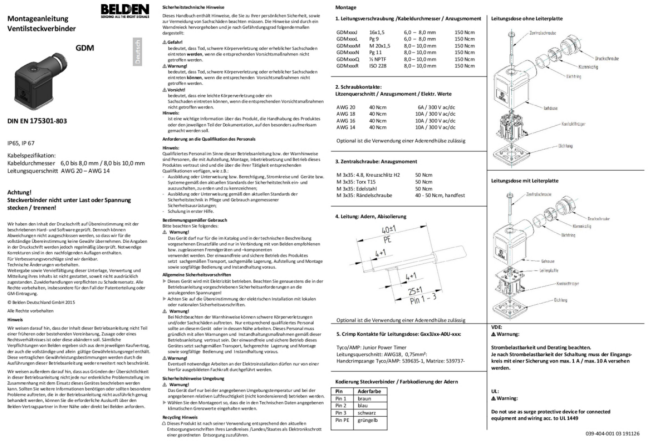

Montageanleitung
Ventilsteckverbinder

GDM

DIN EN 175301-803

IP65, IP 67

Kabelspezifikation:
Kabeldurchmesser 6,0 bis 8,0 mm / 8,0 bis 10,0 mm
Leitungsquerschnitt AWG 20 – AWG 14

**Achtung!**
**Steckverbinder nicht unter Last oder Spannung stecken / trennen!**

Montage

Leitungsdose ohne Leiterplatte

Leitungsdose mit Leiterplatte

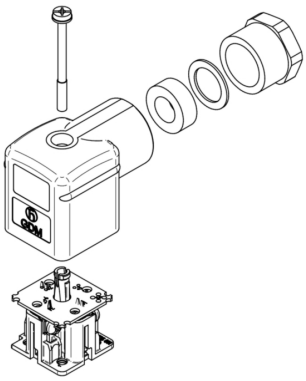

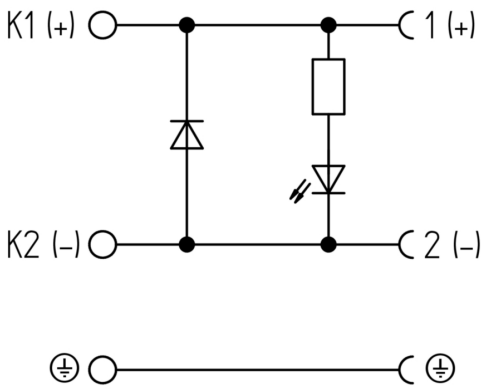


## Technical Specifications

### Product Life Cycle

| | |
|---|---|
| Availability: | Active |

### Technical Data

| | |
|---|---|
| Product Family: | Valve Connectors |
| Side 1 Product Sub Family: | GDM Standard |
| Brand: | Hirschmann |
| Connector Type: | Field Attachable |
| Connector Sub Type: | Form A |
| Side 1 Type of Contact/Gender: | Socket Contacts / Female |
| Connector Design: | Angled (90°) Body |
| Number of Pins: | 2+PE (PE across cable outlet) |
| Coding, Side 1: | A |
| Shielding Type: | Unshielded |
| Attachment Type: | Central Screw, M 3 x 35 |
| Voltage Rating: | 48 V |
| Rated Impulse Voltage: | 4.0 kV (PCBA 2.0 kV) |
| Operating Voltage: | 48 V DC |
| Current Rating: | 10 A |
| Side 1 Contact Resistance: | ≤ 10 mOhm |
| Insulation Resistance: | > 10^9 Ohm |
| Mating Cycles: | ≤ 50 |
| Type of Connection: | Screw terminal |
| Cable Gland: | M20 |
| Cross Section: | 0.25 - 1.5 mm² |
| Suitable Cables: | Ø 4.5 - 11 mm |
| Ambient Temperature (Operation)*: | - 40 °C to + 80 °C [ Connector ] - 30 °C to + 80 °C [ when mated with NBR gasket] - 15 °C to + 80 °C [ when mated with FKM gasket] - 40 °C to + 80 °C [ when mated with EPDM or MPQ gasket] |
| Protection Degree / IP Rating**: | IP65 |
| Side 1 Design Standard: | DIN EN 175301-803-A, ISO 4400 |
| Side 1 Pollution Degree: | 3 acc. to DIN EN 60664-1 (VDE 0110-1) |
| Clearance / Creepage Distance: | DIN EN 60664-1 (2008/01); VDE 0110-1 |
| Overvoltage Category: | III acc. to DIN EN 60664-1 (VDE 0110-1) |

### Materials

| | |
|---|---|
| Contact Base Material: | Brass (CuZn) |
| Side 1 Contact Plating: | Copper-Tin Alloy (Cu/Sn) |
| Contact Bearer Material: | Glass-Fiber Reinforced Polyamide (PA GF) |
| Contact Bearer Color: | Black |
| Flammability Class (Contact Bearer): | UL 94 HB |

| | |
|---|---|
| Housing Material: | Glass-Fiber Reinforced Polyamide (PA GF) |
| Housing Color: | Translucent |
| Flammability Class (Housing): | UL 94 HB |
| Cable Gland Material: | Glass-Fiber Reinforced Polyamide (PA GF) |
| Cable Gland Gasket: | Nitrile Butadiene Rubber (NBR) |
| Cable Gland Color: | Black |
| Flammability Class (Cable Gland): | UL 94 HB |
| Attachment Material: | Steel Fastener (4.8 , Fe/Zn B) |
| Gasket Material: | Sold separately |

## Protection Circuitry

| | |
|---|---|
| Function Indicator: | Yellow LED |
| Protective Circuit: | Recovery Diode (FRD) |

## Additional Technical Data

| | |
|---|---|
| Fastening Torque (Contact Screw): | (40-50) Ncm for conductor size 0.5 - 1.5 mm²; (30-40) Ncm for conductor size 0.38-0.34 mm²; (25-30) Ncm for conductor size 0.25 mm² |
| Fastening Torque (Cable Gland): | (250-375) Ncm |
| Fastening Torque (Attachment): | (50-60) Ncm |

## Approvals

| | |
|---|---|
| VDE: | VDE-Reg.-Nr.: E349 |
| SEV: | Yes |

## Safety & Environmental Compliance

| | |
|---|---|
| REACH: | Yes |
| RoHS Compliant: | Compliant |

## Notes

| | |
|---|---|
| Note Derating: | Notice derating |
| Protection Degree / IP Rating Note: | IP Rating tested according to IEC standard using combination of a Hirschmann or Lumberg Automation connector mounted and locked |
| Note: | Do not connect or disconnect under load. |

**Variants**

| Item # | Item Description | Central Screw | Gasket | Packaging |
|---|---|---|---|---|
| 934888048 | GDM21FA-D28-10D | 1 - Central Screw Steel, combi head | 0 - Sold Seperately | D - Collect packaging 50 pieces, assembled |

© 2026 Belden, Inc

All Rights Reserved.

Although Belden makes every reasonable effort to ensure their accuracy at the time of this publication, information and specifications described here in are subject to error or omission and to change without notice, and the listing of such information and specifications does not ensure product availability.

Belden provides the information and specifications herein on an "ASIS" basis, with no representations or warranties, whether express, statutory or implied. In no event will Belden be liable for any damages (including consequential, indirect, incidental, special, punitive, or exemplary damages) whatsoever, even if Belden has been advised of the possibility of such damages, whether in an action under contract, negligence or any other theory, arising out of or in connection with the use, or inability to use, the information or specifications described herein.

All sales of Belden products are subject to Belden's standard terms and conditions of sale.

Belden believes this product to be in compliance with all applicable environmental programs as listed in the data sheet. The information provided is correct to the best of Belden's knowledge, information and belief at the date of its publication. This information is designed only as a general guide for the safe handling, storage, and any other operation of the product itself or the one that it becomes a part of. The Product Disclosure is not to be considered a warranty or quality specification. Regulatory information is for guidance purposes only. Product users are responsible for determining the applicability of legislation and regulations based on their individual usage of the product.